# PRODUCT SHEET

**Description:**
Door Bar Handle Lock ø35x1500mm W/ KA 01 Cylinder On Both Sides,SS304 Brushed, W/Dust Free Floor Socket, F/8-12mm, W/5, Metal Keys, cc:1125mm, Cylinder Hole ø19mm, & Bottom Hole, ø13mm. Latch Size: 40mm.

**Item number:**
14.60.615-9

| Units | Box | Carton | HS Code | Barcode |
|---|---|---|---|---|
| Set | 1 | 5 | 8301401100 | 5704866478342 |

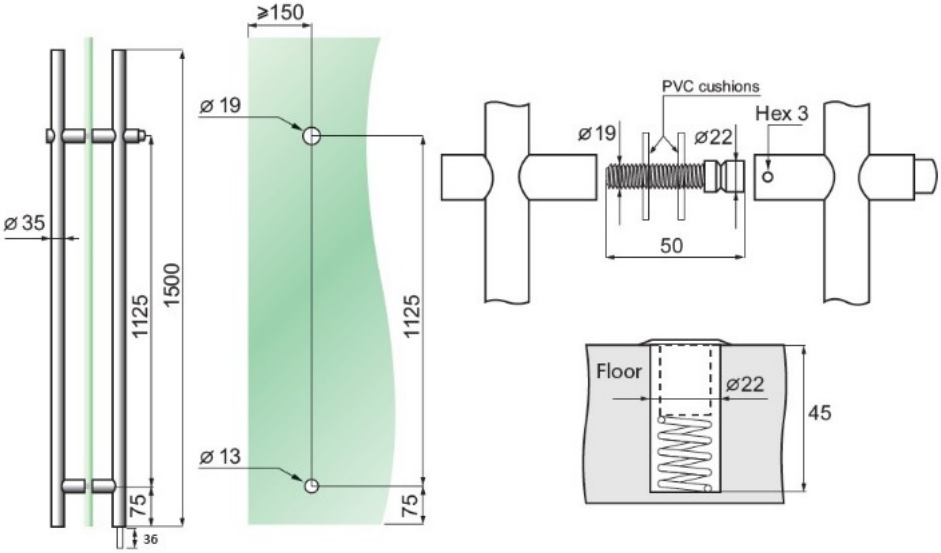


**SISO A/S**
Mileparken 11
DK-2740 Skovlunde
Denmark
VAT: DK 24786013

Phone +45 45 830 900

www.siso.dk
siso@siso.dk

Danske Bank
Nytorv Branch
Copenhagen
SWIFT: DABADKKK

Account no.
4180 3112 112936
IBAN Account
DK7230003112112936